1 -Comp. Loc.: A/C

- ⇒ “1.1 Engine compartment, Climatic ”, page 1
- ⇒ “1.2 Engine component, Climatronic ”, page 2
- ⇒ “1.3 Passenger Compartment, Climatic ”, page 3
- ⇒ “1.4 Passenger Compartment, Climatronic ”, page 4

1.1 Engine compartment, Climatic

Protected by copyright. Copying for private or commercial purposes, in part or in whole, is not permitted unless authorised by Volkswagen AG. Volkswagen AG does not guarantee or accept any liability with respect to the correctness of information in this document. Copyright by Volkswagen AG.

11 - A/C clutch -N25-

- A/C pressure switch -F129-

Protected by copyright. Copying for private or commercial purposes, in part or in whole, is not permitted unless authorised by Volkswagen AG. Volkswagen AG does not guarantee or accept any liability with respect to the correctness of information in this document. Copyright by Volkswagen AG.

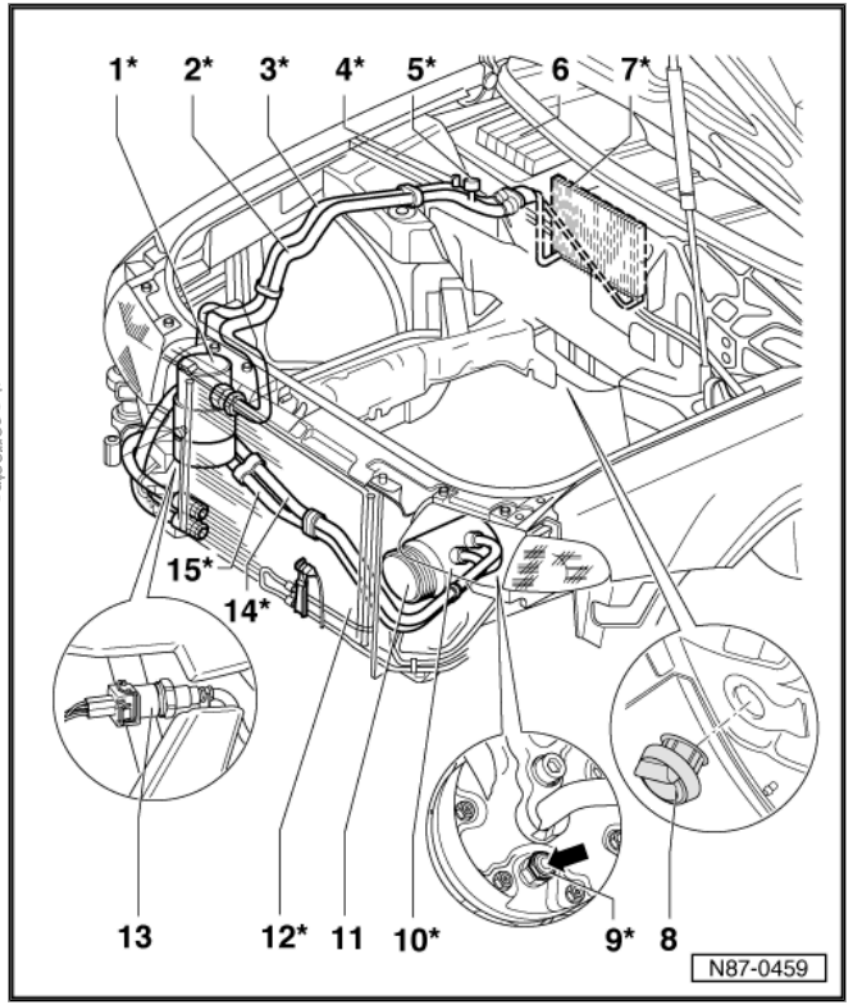

1.2 Engine component, Climatronic

8 - Heater coolant shut-off valve -N279- , if equipped

11 - Coolant fan control module -J293-

- ❑ Engine Codes: BDN, BDP

13 - A/C clutch -N25-

15 - Outside air temperature sensor -G17-

16 - A/C pressure switch -F129-

16 - High pressure sensor -G65-

Protected by copyright. Copying for private or commercial purposes, in part or in whole, is not permitted unless authorised by Volkswagen AG. Volkswagen AG does not guarantee or accept any liability with respect to the correctness of information in this document. Copyright by Volkswagen AG.

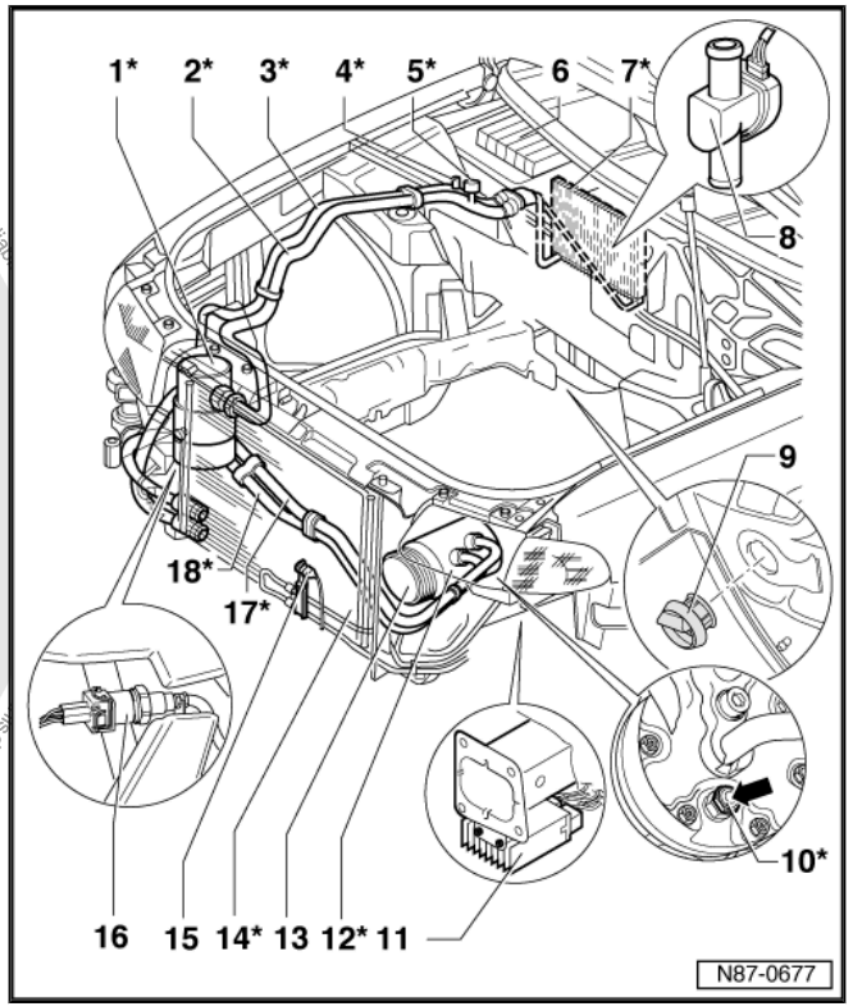

1.3 Passenger Compartment, Climatic

6 - A/C switch -E30-

6 - Fresh air blower switch -E9-

6 - Fresh air/recirculation door switch -E159-

10 - Fresh/recirculated air door motor -V154-

11 - Ambient temperature switch -F38-

15 - Fresh air blower -V2-

16 - Fresh air blower series resistor with fuse -N24-

28 - A/C cut-off control module -J314-

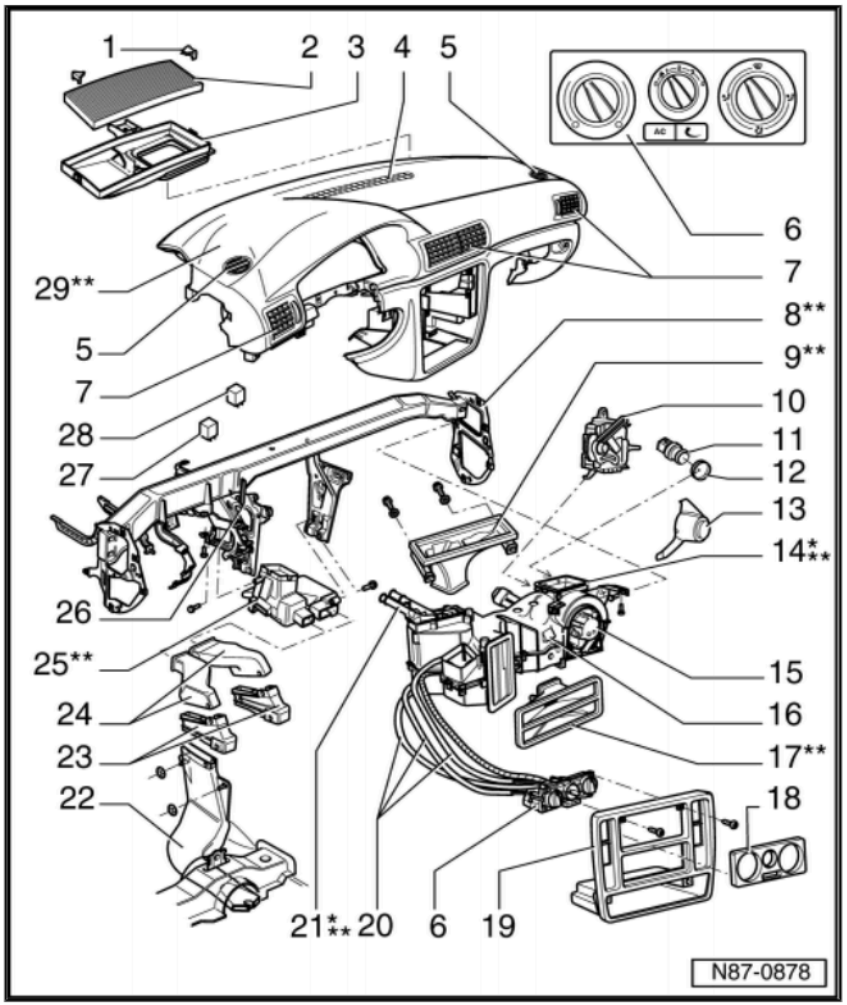

1.4 Passenger Compartment, Climatronic

Protected by copyright. Copying for private or commercial purposes, in part or in whole, is not permitted unless authorised by Volkswagen AG. Volkswagen AG does not guarantee or accept any liability with respect to the correctness of information in this document. Copyright by Volkswagen AG.

4 - Sunlight photo sensor -G107-

7 - Instrument panel temperature sensor -G56-

7 - Interior temperature sensor fan -V42-

7 - Climatronic control module -J255-

8 - Climatronic A/C display control head -E87-

13 - Fresh air intake duct temperature sensor -G89-

14 - Evaporator vent temperature sensor -G263-
- ❑ Vehicles from October, 2000

16 - Air flow door motor -V71-

17 - Fresh air blower -V2-

18 - Fresh air blower control module -J126-

20 - Temperature regulator door motor -V68-

21 - Central air door motor -V70-

22 - Climatronic control module -J255-

23 - Climatronic A/C display control head -E87- trim

25 - Center vent temperature sensor -G191-

28 - Footwell vent temperature sensor -G192-

29 - Footwell/defroster door motor -V85-

37 - A/C clutch relay -J44-
- ❑ Not for engine codes BDN, BDP

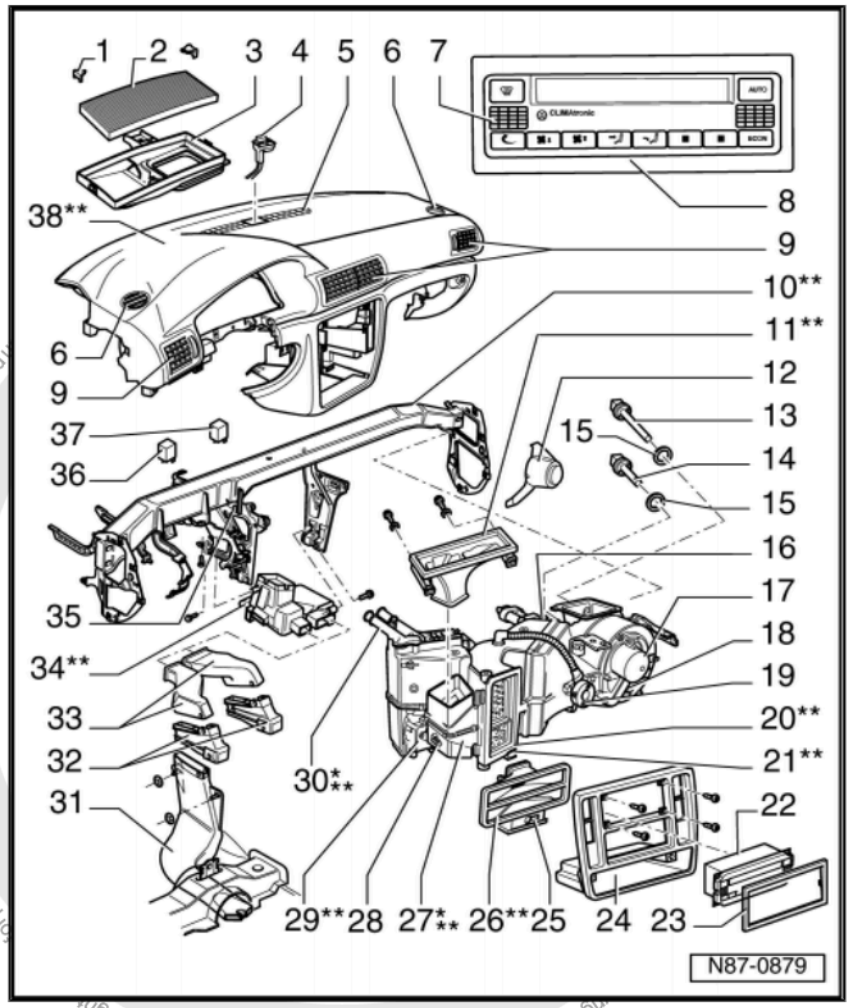

Protected by copyright by Volkswagen AG. For private or commercial purposes, in part or in whole, is not permitted.